POP™

SQUARE UNDERCOUNTER LAVATORY

D20060000.XXX

FEATURES

- Vitreous china with overflow
- Design that combines diamond like facets and precise symmetry
- Designed to fit standard size countertops
- Undercounter mounting kit included
- EverClean® surface inhibits the growth of stain and odor causing bacteria, mold and mildew on the surface (applies to White, Biscuit and Black models)

DIMENSIONS

NOMINAL DIMENSIONS

14-5/8" x 14-5/8" x 7-1/2" (372 x 372 x 191 mm)

BOWL INSIDE DIMENSIONS

11-1/2" (292 mm) wide
11-1/2" (292 mm) front to back
5-1/2" (140 mm) depth

COLORS/FINISHES

Canvas White (415), Biscuit (071), Black (178)

COMPLIANCE CERTIFICATIONS

Meets or Exceeds ASME A112.19.2-2008/CSA B45.1-8

Meets the Americans with Disabilities Act Guidelines and ANSI A117.1 Requirements for Accessible and Usable Building Facilities-Check Local Codes.

A-Fitting Dia.	B-Fitting Spread
A	B
1-3/8" (35 mm)	4" (102 mm)
1-3/8 (35 mm)	8" (203 mm)

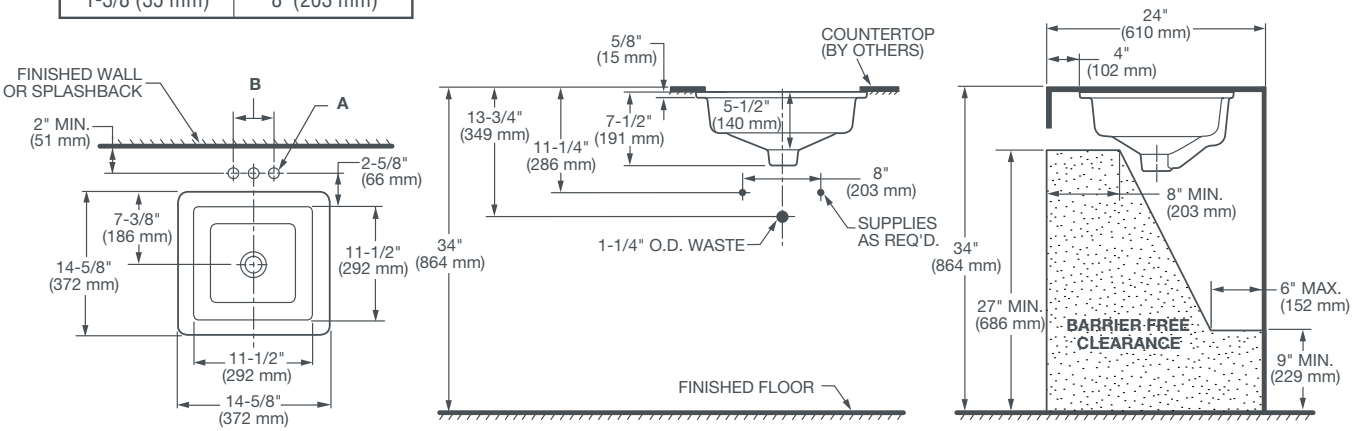

NOTES:

Dimensions shown for location supplies and "P" trap are suggested. Provide suitable reinforcement for all wall supports.
Slab/pedestal anchors amd mounting features to be furnished by others.
Fittings not included with fixture and must be ordered separately.
Installation Instructions supplied with lavatory.

IMPORTANT:
Dimensions of fixtures are nominal and may vary within the range of tolerance established by ANSI standards.
These measurements are subject to change or cancellation. No responsibility is assumed for use of superseded or voided pages.

©2014 AS America Inc.